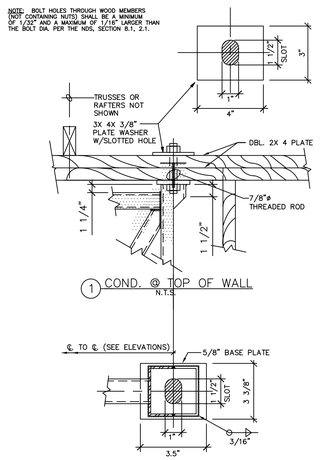

1 COND. @ TOP OF WALL
N.T.S.

2 PLAN DETAIL @ BASE PLATE
N.T.S.

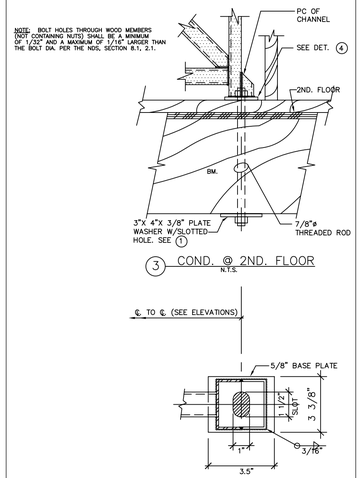

3 COND. @ 2ND. FLOOR
N.T.S.

4 PLAN DETAIL @ PLATE
N.T.S.

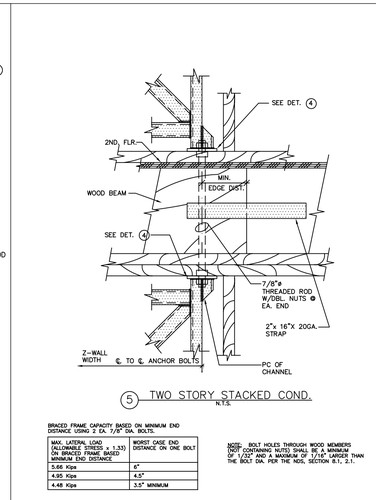

5 TWO STORY STACKED COND.
N.T.S.

BRACED FRAME CAPACITY BASED ON MINIMUM END DISTANCE USING 2 EA. 7/8" DIA. BOLTS.

MAX. LATERAL LOAD (ALLOWABLE STRESS x 1.33) ON BRACED FRAME BASED MINIMUM END DISTANCE	WORST CASE END DISTANCE ON ONE BOLT
5.66 Kips	6"
4.95 Kips	4.5"
4.48 Kips	3.5" MINIMUM

NOTE: BOLT HOLES THROUGH WOOD MEMBERS (NOT CONTAINING NUTS) SHALL BE A MINIMUM OF 1/32" AND A MAXIMUM OF 1/16" LARGER THAN THE BOLT DIA. PER THE NDS, SECTION 8.1, 2.1.

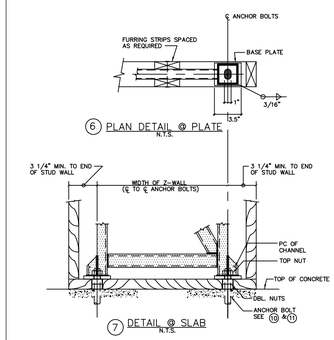

6 PLAN DETAIL @ PLATE
N.T.S.

7 DETAIL @ SLAB
N.T.S.

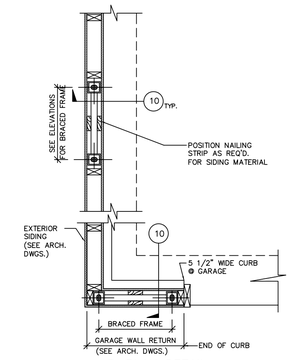

8 PLAN DETAIL
N.T.S.

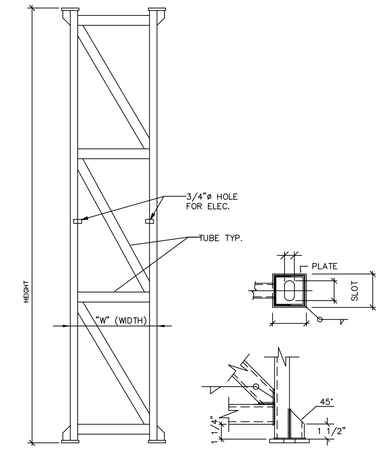

9G TYP. BRACED FRAME ELEVATION FOR STANDARD Z-WALL

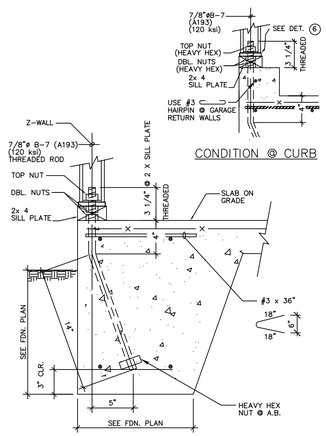

10 FOUNDATION
N.T.S.

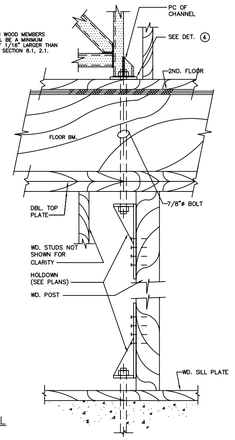

11 DETAIL
N.T.S.

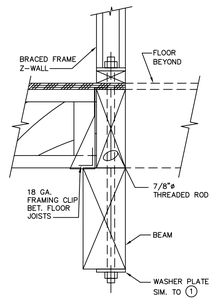

12 DETAIL
N.T.S.

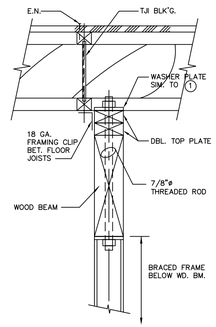

13 DETAIL
N.T.S.

NOTE: BOLT HOLES THROUGH WOOD MEMBERS (NOT CONTAINING NUTS) SHALL BE A MINIMUM OF 1/32" AND A MAXIMUM OF 1/16" LARGER THAN THE BOLT DIA. PER THE NDS, SECTION 8.1, 2.1.

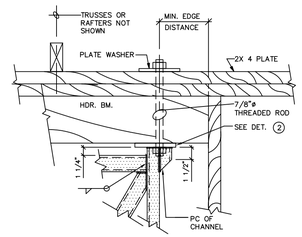

BRACED FRAME CAPACITY BASED ON MINIMUM END DISTANCE USING 2 EA. 7/8" DIA. BOLTS.

MAX. LATERAL LOAD (ALLOWABLE STRESS x 1.33) ON BRACED FRAME BASED MINIMUM END DISTANCE	WORST CASE END DISTANCE ON ONE BOLT
5.66 Kips	6"
4.95 Kips	4.5"
4.48 Kips	3.5" MINIMUM

NOTE: BOLT HOLES THROUGH WOOD MEMBERS (NOT CONTAINING NUTS) SHALL BE A MINIMUM OF 1/32" AND A MAXIMUM OF 1/16" LARGER THAN THE BOLT DIA. PER THE NDS, SECTION 8.1, 2.1.

18 DETAIL
N.T.S.

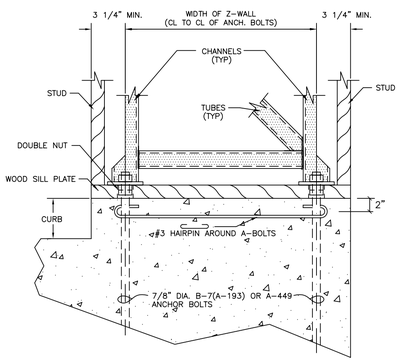

19 CONDITION @ CURB
N.T.S.

BRACED FRAME CAPACITY BASED ON MINIMUM END DISTANCE USING 2 EA. 7/8" DIA. BOLTS.

MAX. LATERAL LOAD (ALLOWABLE STRESS x 1.33) ON BRACED FRAME BASED MINIMUM END DISTANCE	WORST CASE END DISTANCE ON ONE BOLT
5.66 Kips	6"
4.95 Kips	4.5"
4.48 Kips	3.5" MINIMUM

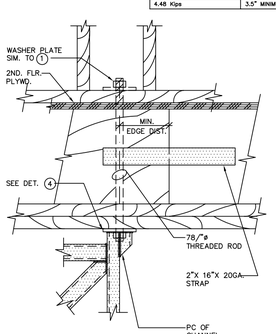

14 COND. @ 2ND. FLOOR
N.T.S.

NOTE: BOLT HOLES THROUGH WOOD MEMBERS (NOT CONTAINING NUTS) SHALL BE A MINIMUM OF 1/32" AND A MAXIMUM OF 1/16" LARGER THAN THE BOLT DIA. PER THE NDS, SECTION 8.1, 2.1.

BRACED FRAME CAPACITY BASED ON MINIMUM END DISTANCE USING 2 EA. 7/8" DIA. BOLTS.

MAX. LATERAL LOAD (ALLOWABLE STRESS x 1.33) ON BRACED FRAME BASED MINIMUM END DISTANCE	WORST CASE END DISTANCE ON ONE BOLT
5.66 Kips	6"
4.95 Kips	4.5"
4.48 Kips	3.5" MINIMUM

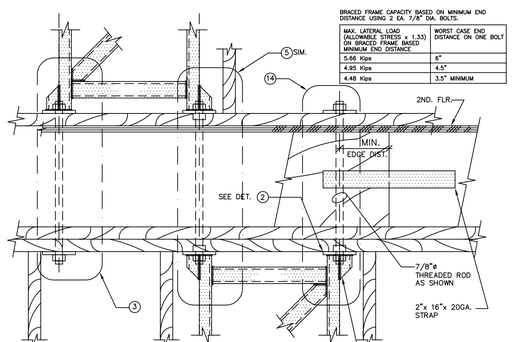

NOTE: BOLT HOLES THROUGH WOOD MEMBERS (NOT CONTAINING NUTS) SHALL BE A MINIMUM OF 1/32" AND A MAXIMUM OF 1/16" LARGER THAN THE BOLT DIA. PER THE NDS, SECTION 8.1, 2.1.

15 OFFSET CONDITION
N.T.S.

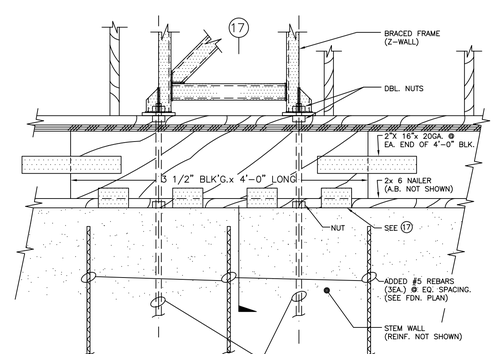

NOTE: BOLT HOLES THROUGH WOOD MEMBERS (NOT CONTAINING NUTS) SHALL BE A MINIMUM OF 1/32" AND A MAXIMUM OF 1/16" LARGER THAN THE BOLT DIA. PER THE NDS, SECTION 8.1, 2.1.

16 DETAIL
N.T.S.

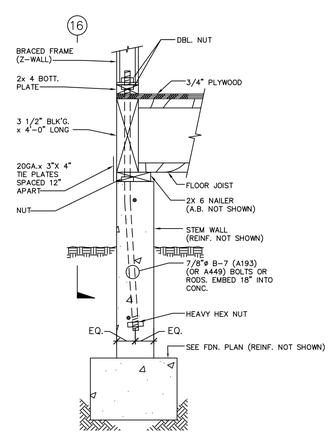

17 DETAIL
N.T.S.

SHEET NO.
Z-1

Copyright by Z-Wall. Ordering and Technical call 800-735-5922 – www.z-wall.net