NOTE: BOLT HOLES THROUGH WOOD MEMBERS (NOT CONTAINING NUTS) SHALL BE A MINIMUM OF 1/32" AND A MAXIMUM OF 1/16" LARGER THAN THE BOLT DIA. PER THE NDS, SECTION 8.1, 2.1.

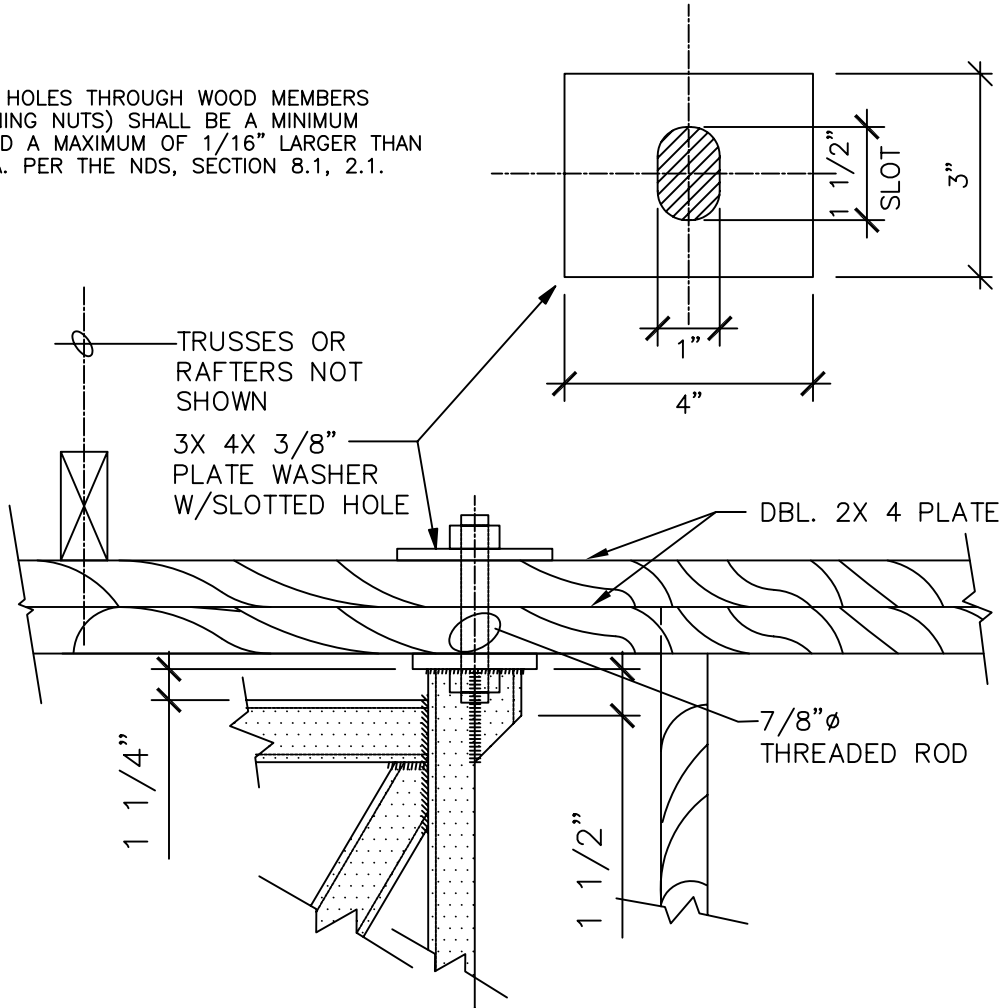

1 COND. @ TOP OF WALL
N.T.S.

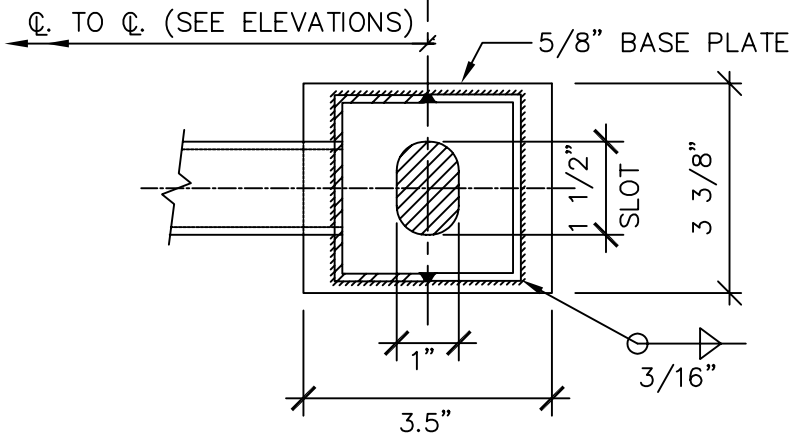

2 PLAN DETAIL @ BASE PLATE
N.T.S.

Copyright by Z-Wall. Ordering and Technical call 800-735-5922 - www.z-wall.net